5 OQDe-G2 EXPRESS DISPLAY LEDs

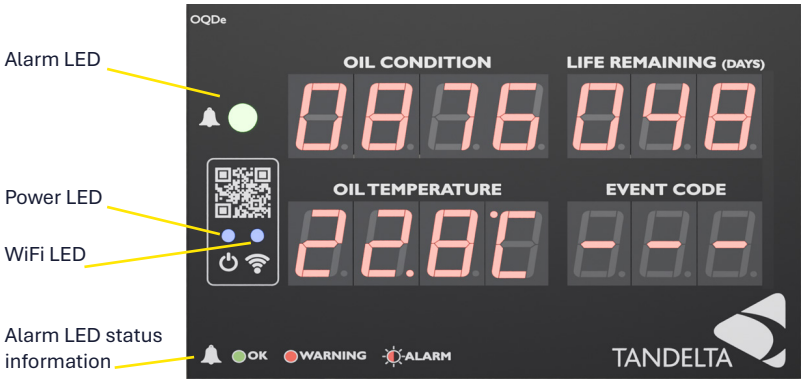

6 OQDe-G2 EXPRESS DISPLAY EVENT CODES

The table below shows example event code displays.

For a full list of event codes see the **SENSE2 User Guide** on the downloads page of our website: www.tandeltasystems.com/downloads

Event Code	Meaning
S01	No Sensor Connected – Please Connect the Sensor.
S02	Sensor Not Configured – Configure the Sensor via TD Config.
E01	Oil Temperature High – Check Regularly.
E02	Oil Temperature Very High – Immediate Action Required
E07	Oil Near End Of Life – Check Regularly
E08	Oil At End Of Life – Change Oil
E09	Sensor In Air
E12	Accelerated Oil Wear Detected
E14	Water / Coolant Contamination Detected
E16	Fuel Dilution Detected
E17	Oil Change Detected

7 SUPPORT - FAQ / TROUBLESHOOTING

If you have any issues, please CLICK or SCAN the QR Code opposite and read our FAQ section.

Alternatively, email: support@tandeltasystems.com

If you have any further questions, please contact our support team.

Tan Delta Systems PLC 1 Carrera Court, Church Road, Dinnington, Sheffield UK S25 2RG
Tel: +44 (0)845 094 8710 Email: support@tandeltasystems.com

Copyright © Tan Delta Systems PLC

Document Part Nº 201-1013-5

SENSE2 DISPLAY KIT
QUICK START GUIDE

TANDELTA
Oil Condition Monitoring

Copyright © Tan Delta Systems PLC

VIDEO TUTORIAL

For a video tutorial, showing the SENSE2 Installation process, visit the website below, or scan the QR code.

http://oilconditionsoftware.com/installsense2

What's in the box?

Item	Description
1	Express Display (**OQDe-G2**)
2	Oil Quality Sensor **OQS** (or long-nosed version **OQL**)
3	Adaptor Cable **CAB-M**
4	Configuration Cable **CAB-J**
5	Sensor to Display Cable **CAB-SD**
6	Sensor to Bare Ends Cable **CAB-SB**
7	Power Supply
8	Quick Start Guide
9	USB Drive

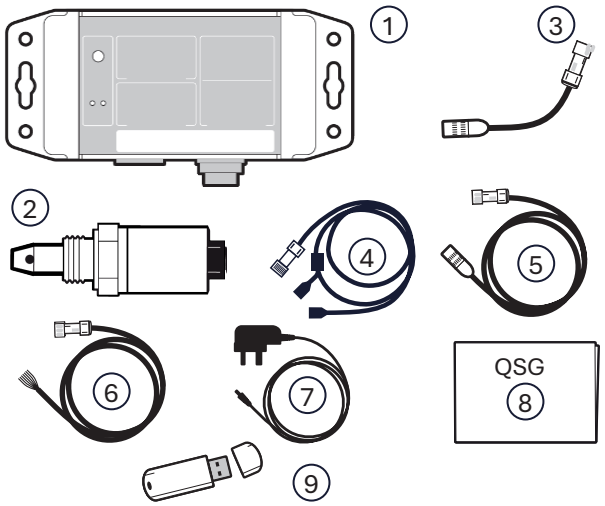

Check that your kit contains all the items shown

1 CONFIGURATION AND INSTALLATION OVERVIEW

To configure and install the SENSE2 kit, you will need the following:

- A Windows PC or Laptop
- Tan Delta **Configuration and Data Management Software** (**TD Config**) available on the **USB Drive** (9) and at:http://oilconditionsoftware.com/setupTD Config.exe
- Access to a mains power connection (for configuration of the OQDe-G2 display)

The configuration and installation process involves the following steps:

- Install TD Config.
- Configure the OQS / OQL sensor in TD Config.
- Configure the OQDe-G2 display in TD Config.
- Install the OQS / OQL sensor on your asset and the OQDe-G2 display in a suitable location.
- Check the system for correct operation.

2 CONFIGURATION - OQS / OQL Sensor

IMPORTANT

You **MUST** configure the OQS / OQL Sensor using TD Config on a Windows PC or laptop. **before** configuring the OQDe-G2 in TD Config.

TD Config is provided on the USB drive supplied with your Kit.

Alternatively, it is available for download online at:

http://oilconditionsoftware.com/installtdconfig

1) Start TD Config, and from the TD Config main menu, select the **SENSE2 Kit** configuration option.
2) Connect the **Sensor** ② to the Configuration Cable **CAB-J** ④.
3) TD Config will display a list of available sensors, identified by their serial numbers. Select the required Sensor by checking its Serial Number.
4) Next, choose the required communication type by selecting the device or communication type you intend to use with the sensor:
   - Display Express for use with SENSE2 or using the 4-20mA analog signal.
   - Custom Settings to setup digital communication to suit your system.
5) Select the oil in which you want to use the sensor.

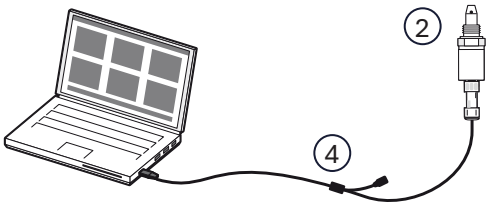

NOTE

If the oil you use is not in the oil database, contact your distributor or Tan Delta support.

3 CONFIGURATION - OQDE-G2 DISPLAY

1) Use **CAB-M** ③ to connect **CAB-J** ④ from your PC/Laptop to the **Display** ①
2) Connect the 9-30 V DC **Power Supply** ⑦ to **CAB-J** ④ to power up the display.
3) From the TD Config main menu, select **Configure OQDe**.
   A list of all connected devices is displayed, identified by serial number.
4) Select the required device and click the Next (right) arrow at the top of the TD Config screen.
   TD Config allows you to select from the following presets:
   Diesel Engine; **Gearbox**; **Hydraulic**; **Compressor**; **Transformer**. There is also an option to add **Other / Custom** application.
   TD Config also allows you to adjust the following display parameters:

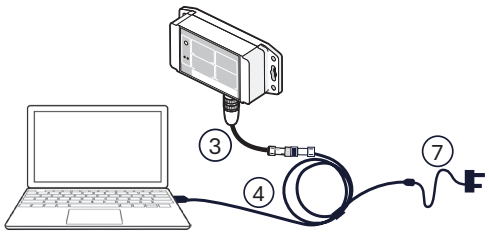

- Warning & Alarm Levels: the points at which the Status LED changes from Green, to flashing Red, to Solid Red.
- Display Date/time.

NOTE

The default oil condition warning and alarm levels are set for a diesel engine application.

3.1 Using Insight

Following initial configuration via TD Config, the OQDe-G2 parameters can be adjusted via TD Config or the **Insight** mobile application, which allows you to adjust your settings as required. For more information, visit: www.tandeltasystems.com/support/

4 INSTALLATION AND CONNECTION

NOTE

For **Installation** - use **CAB-M** ③, **CAB-SD** ⑤ and **CAB-SB** ⑥.

IMPORTANT

The Sensor nose must be submerged completely in oil for accurate results.
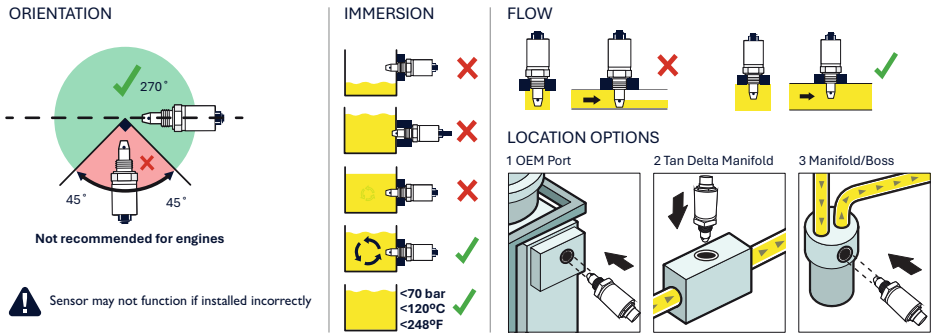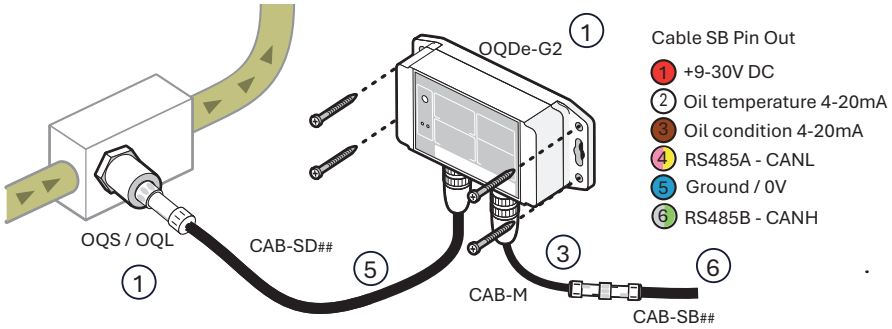
After initial switch-on, wait one minute for the display readings to stabilise.